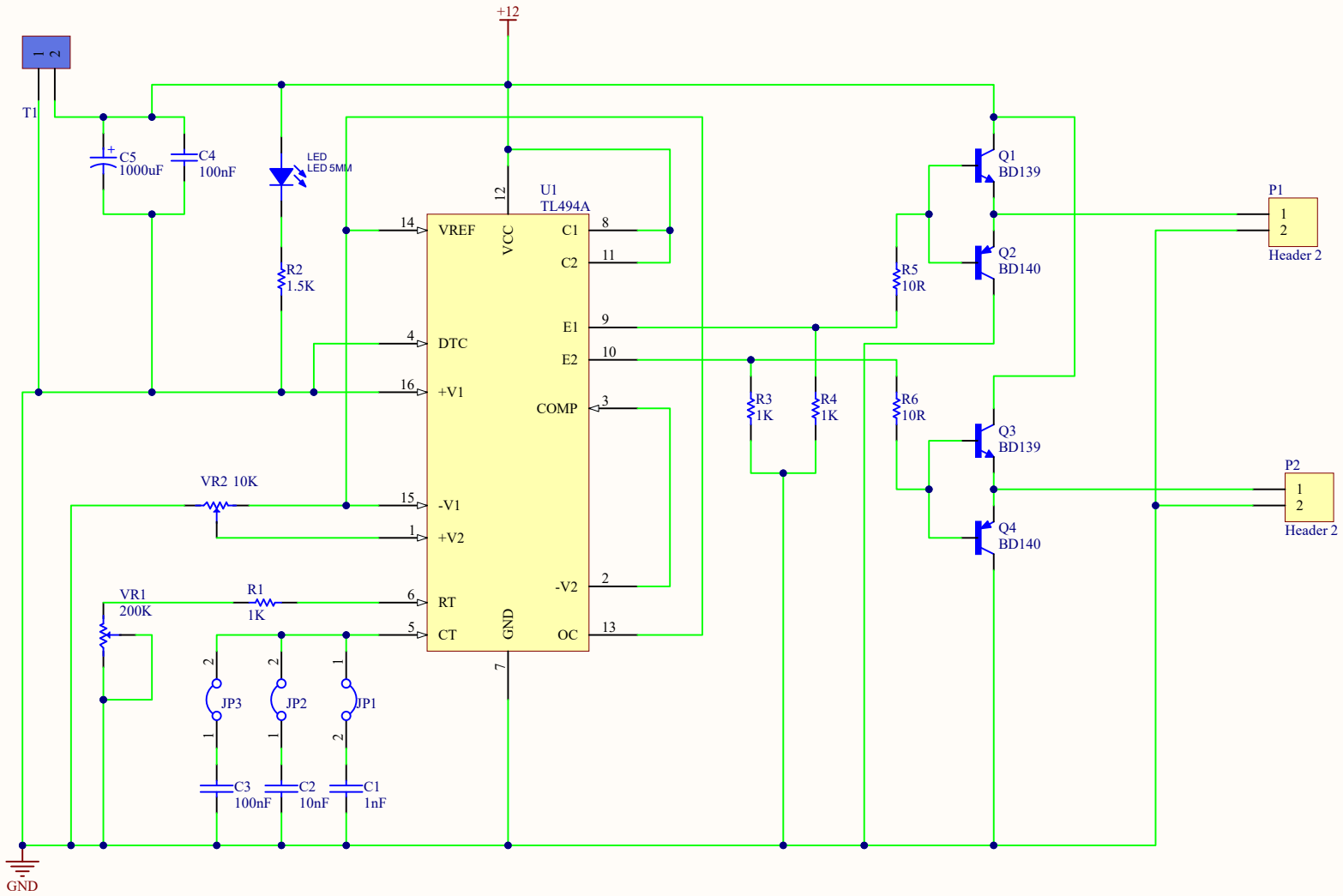
+12
T1
C5
1000uF
C4
100nF
LED
LED 5MM
R2
1.5K
U1
TL494A
VREF
VCC
C1
C2
DTC
E1
E2
+V1
COMP
-V1
+V2
-V2
RT
CT
GND
OC
VR2 10K
VR1
200K
R1
1K
JP3
JP2
JP1
C3
100nF
C2
10nF
C1
1nF
R3
1K
R4
1K
R5
10R
R6
10R
Q1
BD139
Q2
BD140
Q3
BD139
Q4
BD140
P1
Header 2
P2
Header 2
GND